DIAS Infrared Systems

Pyroelectric Linear Arrays
PYROSENS

For Spectroscopic Application

www.dias-infrared.com

PYROSENS – Pyroelectric Linear Arrays 128LTIx

with 128, 256 or 510 Elements and Integrated CMOS Multiplexer

Linear Arrays in Volume Production

The LTIx family of pyroelectric linear arrays is specifically designed for infrared spectrometry. The arrays include a lithium tantalate chip with 128, 256 or 510 elements. The signals produced by the elements are processed in a CMOS circuit. Signal processing is carried out by the analogue circuitry, including an adapted low-noise preamplifier for each pixel, a multiplexer and an output amplifier. The pyroelectric chip and CMOS readout circuit are located on a thick film substrate, all mounted inside a hermetic metal housing. The incident radiation passes through a window or filter, transparent to infrared wavelengths, and reaches the sensitive elements.

The preamplifiers transform the signal charges of each pixel into a signal voltage, include bandwidth limiting and pass the amplified signal to the sample & hold for the read-out process. The digital inputs are CMOS compatible.

For measurement of the detector temperature a sensor (type AD 590) is integrated into the package. It provides an output current which is proportional to the temperature.

In common with all pyroelectic detectors, the incoming infrared radiation needs to be modulated for a measurement to be made.

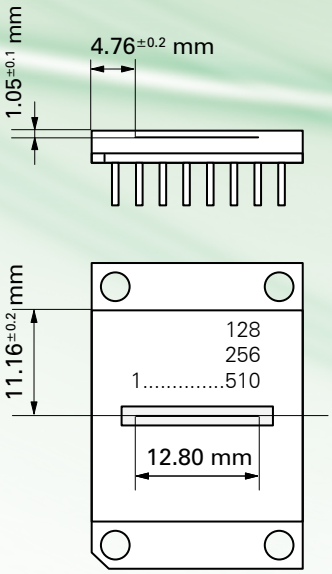

Technical Data

Features	Maximum/minimum Conditions[1]	Typical Responsivity
– 128, 256 or 510 pixels arranged in one line – NEP (128 Hz) down to 1.2 nW – Dynamic range > 75 dB – Modulation frequency up to 512 Hz – Output voltage 2.5 V ± 2 V – Integrated CMOS multiplexer – High long-term stability – Simple mode of operation – Operation at ambient temperature – Small package – Coated silicon or germanium as infrared window – Broad band windows (> 1.3 µm) or special filters on request – Customized arrays with up to 510 elements with special sizes	– VDD, VD2: –0.3 V to 7 V – Digital inputs CLK, RES, VVR, VDR, VSH: –0.3 V to VDD + 0.3 V – Chopping frequency f_{Ch}: 10 Hz to 512 Hz – AD590+ to AD590–: –20 V to 44 V – Analog output[2]: ± 5 mA – Maximum irradiance: 50 mW/mm [2] – Soldering temperature: 300 °C – Storage temperature: –20 °C to 80 °C – Operation temperature: –15 °C to 70 °C [1] All voltages refer to ground (pin 10, 15). [2] Not short resistent.	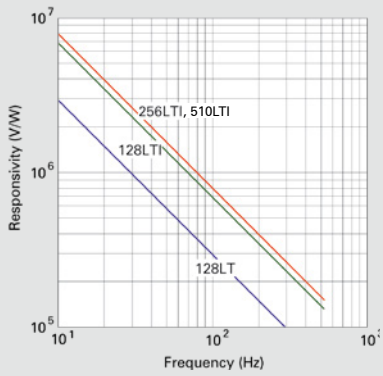

Typical MTF

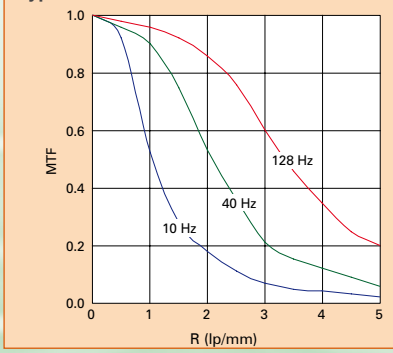

Electrical Parameters[3]

Parameter	Minimum value	Typical value	Maximum value	Unit
VDD	4.75	5.0	5.25	V
VD2	2.4	2.5	2.6	V
Digital inputs, low voltage	0		0.3 VDD	V
Digital inputs, high voltage	0.7 VDD		VDD	V
Digital inputs, switching threshold		0.5 VDD		V
Digital inputs, leakage current			± 1	µA
Current consumption		8		mA
AD590 operating voltage[4]	4 [5]		30	V

[3] All values for VDD = 5 V, VD2 = 2,5 V. [4] See data sheet of Analog Devices. [5] Valid for 510LTx.

, 256LTIx and 510LTIx

DIAS Infrared Systems

Pyroelectric linear arrays – types and features											
Type	128LTI SP0.5	128LTI SP1.0	256LTI SP0.5	256LTI SP0.5 V3	256LTI SP0.5 V8	256LTI SP0.5 V16	256LTI SP1.0	256LTI SP1.0 V3	256LTI SP1.0 V8	256LTI SP1.0 V16	510LTI SP0.5
Pixel number	128	128	256	256	256	256	256	256	256	256	510
Pixel width in µm	90	90	42	42	42	42	42	42	42	42	20
Pixel length in µm	500	1000	500	500	500	500	1000	1000	1000	1000	500
Pitch in µm	100	100	50	50	50	50	50	50	50	50	25
Electro-optical specification[1]											
Responsivity S_V in V/W	540000	540000	620000	1850000	4950000	9900000	620000	1850000	4950000	9900000	680000
Noise voltage U_N in mV	1.2	1.9	0.9	2.2	6.5	13.0	1.1	3.0	8.5	17.0	1.3
NEP in nW	2.2	3.5	1.4	1.2	1.3	1.3	1.8	1.6	1.7	1.7	1.7
MTF (R = 3lp/mm)	0.6	0.6	0.6	0.6	0.6	0.6	0.6	0.6	0.6	0.6	0.8
Uniformity[2] of S_V in %	5	5	5	5	5	5	5	5	5	5	10

Pins – 128LTIx, 256LTIx and 512LTIx		
Pin	Name	Function
1	CLK	Input clock CLK (trigger on rising edge)
2	RES	Input clock RES (active low)
3	VVR	Input clock VVR (active high)
4	VDR	Input clock VDR (active high)
5	VSH	Input clock VSH (active high)
6	VD2	Operating voltage (+2.5 V)
7	VDD	Operating voltage (+5 V)
8	VD2	Operating voltage (+2.5 V)
9	OUT	Analog signal output
10	GND	Ground
11	OUT2	Analog signal output 2 (LTI 510x) or n.c. (128LTIx, 256LTIx)
12	AD590+	Temperature sensor
13	AD590–	Temperature sensor
14	case	Case
15	GND	Ground
16	VDD	Operating voltage (+5 V)

Connect pin 6 to pin 8 (VD2), pin 7 to pin 16 (VDD), pin 10 to pin 15 (GND).

Dimensions

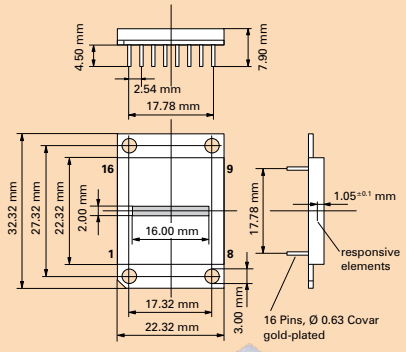

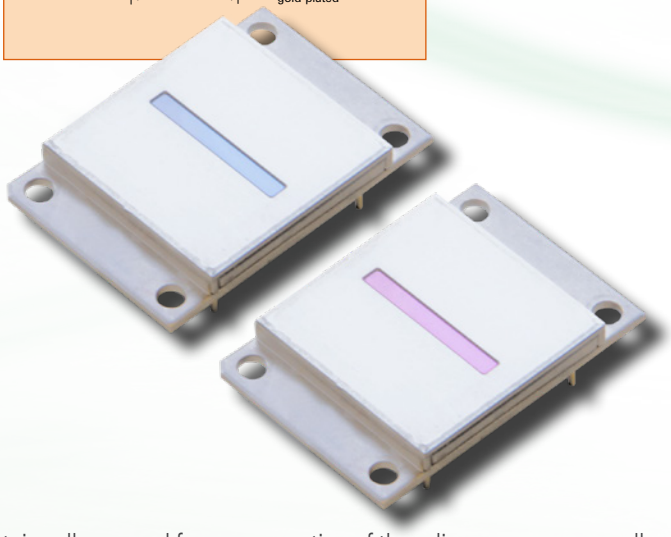

Evaluation Kit

Our evaluation kit contains all you need for easy operation of these linear arrays – a small board with complete electronics and a software package. The kit can be controlled by a Windows PC via USB connection.

The power can be provided by the USB port or a separate power supply (9 V). For syncronisation with further external components, such as for radiation modulation, a trigger pulse is provided. The read-out cycle can be adjusted between 1 and 30 lines/s.

[1] Typical values, rectangular chopping with 128 Hz, array temperature 25 °C, black body source temperature 400 °C, filter transmission 100 %. [2] No defective element.

PYROSENS

Pyroelectric Linear Arrays

Internal Readout-Circuit

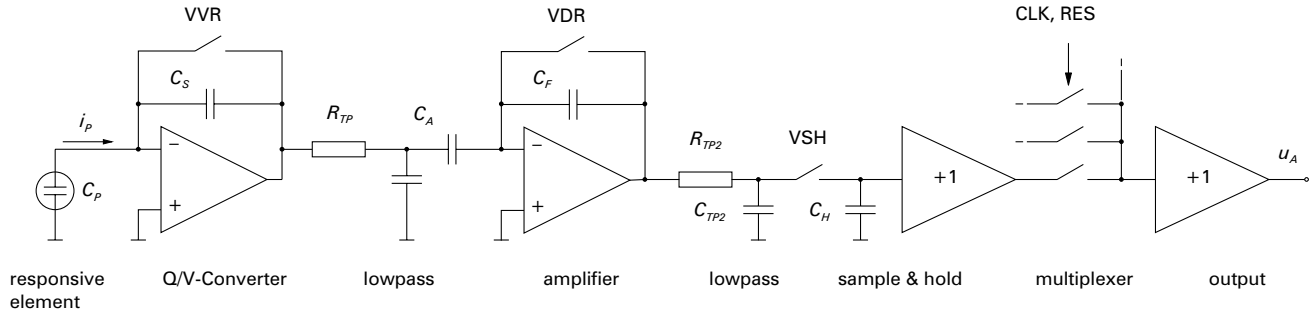

Clock parameters[1]					
Parameter	**Relative value**	**Minimum value**	**Typical value**	**Maximum value**	**Unit**
Chopping frequency[2] f_{Ch}		10	128	512	Hz
Readout CLK $f_{CLK} = 2 \cdot f_{Ch} \cdot 268$	$1/t_{CLK}$	0	69	300	kHz
Reset clock low-impulse duration t_{RES}	$1/2\ t_{CLK}$	1.8	7.5		µs
Clock VVR high-impulse duration t_{VVR}	$2\ t_{CLK}$	7.5	30		µs
Clock VDR high-impulse duration[3] t_{VDR}	$28\ t_{CLK}$	200	400		µs
Clock VSH high-impulse duration t_{VSH}	$1\ t_{CLK}$	3.5	15		µs
Setting time at the output t_{out}				1	µs

[1] All values for VDD = 5 V, VD2 = 2,5 V. [2] $t_{Ch\ low} = t_{Ch\ high}$. [3] For f_{Ch} = 512 Hz must be $t_{VDR} = 56 \cdot t_{CLK}$ = 200 µs.

Clock diagramm

Technische Änderungen vorbehalten. Technical details are subject to change. 17.01.18

We are certified for many years according to ISO 9001

Phone: +49 351 896 74-0
Fax: +49 351 896 74-99
E-Mail: info@dias-infrared.de
Web: www.dias-infrared.com

DIAS Infrared GmbH
Pforzheimer Straße 21
01189 Dresden
Germany