PYROSPOT DS 47N and DG 47N

Ethernet pyrometer for industrial application

Overview

Digital pyrometer with Ethernet interface and webserver

Features

- For temperature measurements between 250 °C and 2500 °C
- Temperature linear output 0/4 to 20 mA
- Ethernet interface 100 Mbit/s
- Intergrated web server
- Short response times from 5 ms
- Different fixed and vario optics available
- Integrated LED or laser aiming light
- Robust stainless steel housing

Description and application

The digital pyrometers PYROSPOT DS 47N and PYROSPOT DG 47N are especially designed for industrial applications. They are suitable for temperature measurements from 250 °C on a wide variety of surfaces such as metals, graphite and ceramics.

The solid construction in a compact stainless steel housing with protection window ensures use even under harsh environmental conditions. With a response time of only 5 ms (t_{95}), these pyrometers are also suitable for fast measurements. Different fixed or vario optics variants realize measuring fields from 1.2 mm diameter.

With the integrated LED or laser aiming light, the pyrometers can be precisely adjusted to the measuring object. The LED pilot light is nearly identical in size to the measuring field.

The devices are equipped with an Ethernet interface, which allows data transfer to local networks. Via an integrated web server or the Modbus-TCP protocol, the parameters can be optimally adapted to the application.

The temperature linear standard output signal of 0/4 to 20 mA allows easy implementation into existing measurement and control systems.

The comprehensive parameterization and evaluation software PYROSOFT Spot can also be used for parameterization and measured value recording.

Typical application areas of the pyrometers are:

- Steel industry
- Furnace construction
- Soldering plants
- Ceramics industry
- Metal industry

Image source: Shutterstock.de/DAlimkin

PYROSPOT DS 47N and DG 47N

Ethernet pyrometer for industrial application

DIAS Infrared Systems

Technical data

Type	DS 47N				DG 47N					
Measuring temperature range	600 °C to 1800 °C		800 °C to 2500 °C		250 °C to 1300 °C		250 °C to 2000 °C		350 °C to 1800 °C	
Sub range of analog output	adjustable within measuring temperature range, minimum span 50 °C									
Spectral range	0.8 µm to 1.1 µm				1.5 µm to 1.8 µm					
Optics	different fixed optics (type 210, 290, 650 and 4000) with quartz glass protection window , vario optics									
Part number	LED	Laser	LED	Laser	LED	Laser	LED	Laser	LED	Laser
Optics 210	4470051401	4470061401	4470051402	4470061402	4471051401	4471061401	4471051403	4471061403	4471051402	4471061402
Optics 290	4470052401	4470062401	4470052402	4470062402	4471052401	4471062401	4471052403	4471062403	4471052402	4471062402
Optics 650	4470053401	4470063401	4470053402	4470063402	4471053401	4471063401	4471053403	4471063403	4471053402	4471063402
Optics 4000	4470054401	4470064401	4470054402	4470064402	4471054401	4471064401	4471054403	4471064403	4471054402	4471064402
Vario optics	4470001401	4470011401	4470001402	4470011402	4471001401	4471011401	4471001403	4471011403	4471001402	4471011402
Distance ratio	approx. 100 : 1		approx. 200 : 1		approx. 100 : 1		approx. 100 : 1		approx. 200 : 1	
Measurement uncertainty [1]	0.5 % of measured value in °C + 1 K									
Reproducibility [1]	0,1 % of measured value in °C + 0.5 K									
NETD [1,2]	0.1 K									
Response time (t_{95})	5 ms (min.), adjustable up to 100 s									
Emissivity	0.05 to 1.00, adjustable									
Data storage	minimum-/maximum value storage									
Output	0/4 to 20 mA, temperature linear, max. burden: 500 Ω									
Interface	Ethernet 100 Mbit/s, web server, data protocol Modbus-TCP									
Aiming/targeting	integrated LED or laser aiming light									
Software	PYROSOFT Spot for Windows®, optional: PYROSOFT Spot Pro									
Parameters	adjustable via web server or Modbus-TCP: emissivity, response time, data storage, sub range, transmittance, analog output, aiming light; additionally via Modbus-TCP: network configuration									
Power supply	24 V DC ± 25 %, residual ripple 500 mV									
Power consumption	max. 1.5 W									
Operating temperature	0 °C to 70 °C									
Storage temperature	–20 °C to 70 °C									
Weight	approx. 450 g									
Dimensions	thread M40 × 1.5, length 125 mm									
Housing	stainless steel housing with plug connector									
Protection class	IP 65 (according to DIN EN 40050 and DIN 60529)									
CE symbol	according to EU regulations									
Scope of delivery	PYROSPOT DS 47N or DG 47N, manual, mounting screw nuts, inspection sheet, PYROSOFT Spot for Windows® (without connection cables, please order separately)									

[1] Specifications for black body radiator. $T_{ambience}$ = 23 °C, t_{95} = 1 s. [2] Noise equivalent temperature difference.

Dimenisons

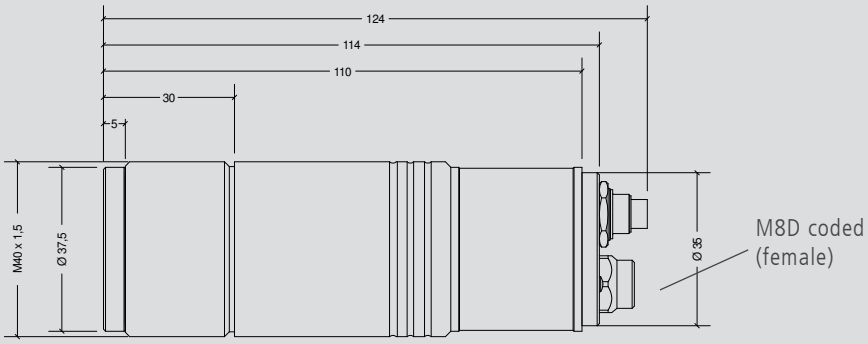

PYROSPOT DS 47N and DG 47N

Ethernet pyrometer for industrial application

DIAS Infrared Systems

Optics types 210, 290, 650 und 4000

Optics 210 (Focus point at a = 210 mm measurement distance, aperture ∅ D = 12,5 mm)

Measurement distance a [mm]	0	100	**210**	300	400	500	600
Measuring temperature range	Target size M [mm]						
DS 47N (600 °C to 1800 °C)	12.5	7.5	**2.0**	8.2	15.1	22.0	28.9
DS 47N (800 °C to 2500 °C)	12.5	7.1	**1.2**	7.1	13.6	20.1	26.6
DG 47N (250 °C to 1300 °C)	12.5	7.5	**2.0**	8.2	15.1	22.0	28.9
DG 47N (250 °C to 2000 °C)	12.5	7.5	**2.0**	8.2	15.1	22.0	28.9
DG 47N (350 °C to 1800 °C)	12.5	7.1	**1.2**	7.1	13.6	20.1	26.6

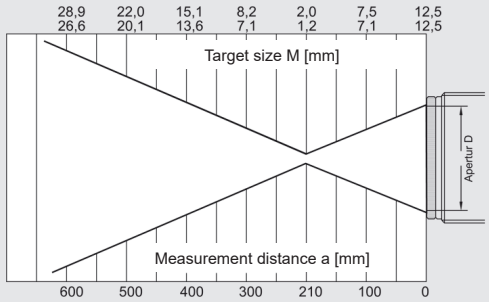

Optics 290 (Focus point at a = 290 mm measurement distance, aperture ∅ D = 11,8 mm)

Measurement distance a [mm]	0	100	200	**290**	400	500	600
Measuring temperature range	Target size M [mm]						
DS 47N (600 °C to 1800 °C)	11.8	8.8	5.7	**3.0**	8.6	13.7	18.8
DS 47N (800 °C to 2500 °C)	11.8	8.2	4.7	**1.5**	6.5	11.1	15.7
DG 47N (250 °C to 1300 °C)	11.8	8.8	5.7	**3.0**	8.6	13.7	18.8
DG 47N (250 °C to 2000 °C)	11.8	8.8	5.7	**3.0**	8.6	13.7	18.8
DG 47N (350 °C to 1800 °C)	11.8	8.2	4.7	**1.5**	6.5	11.1	15.7

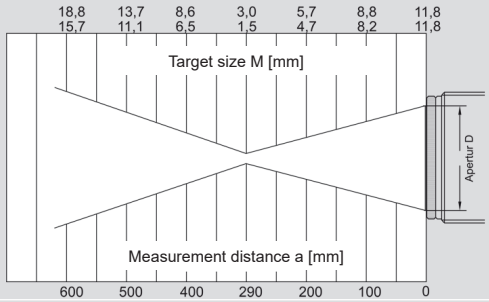

Optics 650 (Focus point at a = 650 mm measurement distance, aperture ∅ D = 10,8 mm)

Measurement distance a [mm]	0	200	400	**650**	800	1000	1200
Measuring temperature range	Target size M [mm]						
DS 47N (600 °C to 1800 °C)	10.8	9.5	8.2	**6.5**	10.5	15.8	21.1
DS 47N (800 °C to 2500 °C)	10.8	8.6	6.3	**3.5**	6.8	11.2	15.6
DG 47N (250 °C to 1300 °C)	10.8	9.5	8.2	**6.5**	10.5	15.8	21.1
DG 47N (250 °C to 2000 °C)	10.8	9.5	8.2	**6.5**	10.5	15.8	21.1
DG 47N (350 °C to 1800 °C)	10.8	8.6	6.3	**3.5**	6.8	11.2	15.6

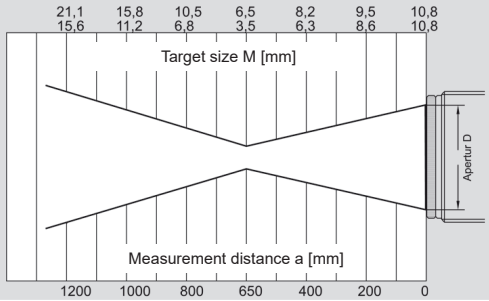

Optics 4000 (Focus point at a = 4000 mm Measurement distance, Aperture ∅ D = 10,4 mm)

Measurement distance a [mm]	0	400	800	1000	1500	2000	**4000**
Measuring temperature range	Target size M [mm]						
DS 47N (600 °C to 1800 °C)	10.4	13.4	16.3	17.8	21.5	25.2	**40.0**
DS 47N (800 °C to 2500 °C)	10.4	11.4	12.3	12.8	14.0	15.2	**20.0**
DG 47N (250 °C to 1300 °C)	10.4	13.4	16.3	17.8	21.5	25.2	**40.0**
DG 47N (250 °C to 2000 °C)	10.4	13.4	16.3	17.8	21.5	25.2	**40.0**
DG 47N (350 °C to 1800 °C)	10.4	11.4	12.3	12.8	14.0	15.2	**20.0**

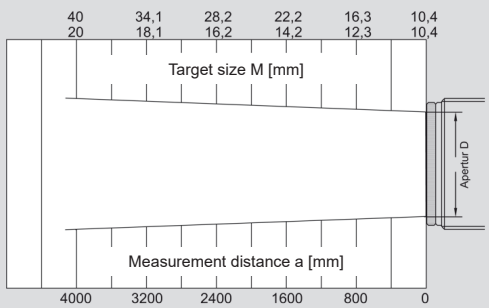

Vario optics

DS 47N

Meas. temperature range	Meas. distance a	Target size M	Aperture ∅ D
600 °C to 1800 °C	300 mm to 800 mm	3.0 mm to 8.6 mm	10 mm
800 °C to 2500 °C	300 mm to 800 mm	1.5 mm to 5.5 mm	10 mm

DG 47N

Meas. temperature range	Meas. distance a	Target size M	Aperture ∅ D
250 °C to 1300 °C	300 mm to 800 mm	3.0 mm to 8.6 mm	10 mm
250 °C to 2000 °C	300 mm to 800 mm	3.0 mm to 8.6 mm	10 mm
350 °C to 1800 °C	300 mm to 800 mm	1.5 mm to 5.5 mm	10 mm

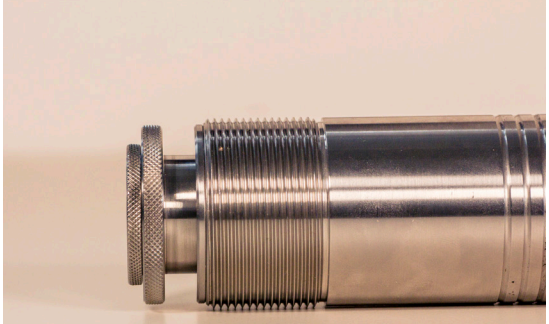

Pyrometer with vario optics. The cooling jacket is only available for devices with fixed optics. .

PYROSPOT DS 47N and DG 47N

Ethernet pyrometer for industrial application

Electrical, mechanical and optical accessories[1]		Part number
Connection cable (5 pin)	length 5 m length 10 m length 15 m	3310A11512 3310A11513 3310A11514
Ethernet cable RJ45 (4 pin)	length 5 m length 10 m length 15 m	3310A11412 3310A11413 3310A11414
Power supply PSU 15	24 V DC, 0.6 A	3310A12010
Mounting angle	fixed adjustable	3310A21010 3310A21011
Ball and socket mounting		3310A21012
Air purge unit	stainless steel, purge air 0.1 to 0.5 bar, oil-free	3310A22010
Sighting tube for air purge unit	length 100 mm length 300 mm	3310A22030 3310A22035
Mirror	90°, including air purge	3310A24110
Cooling jacket	stainless steel with integrated air purge unit	3310A23010
Vacuum flange KF 16	with quartz window or with sapphire window	3310A24010 + 3310A34021 3310A24010 + 3310A34051
Protection window	sapphire window with threaded ring	3310A34052
Ball flange	with sleeve	3310A24020 + 3310A24021
[1] More accessories on request.		

Selected accessories – images

Mounting angle, adjustable

Part number: 3310A21011

Cooling jacket

Part number: 3310A23010

Air purge unit

Part number: 3310A22010

Window slide

Part number: 3310A21210 (without window)

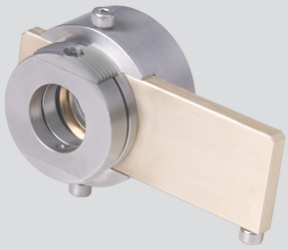

Vacuum flange KF 16

Part number: 3310A24010

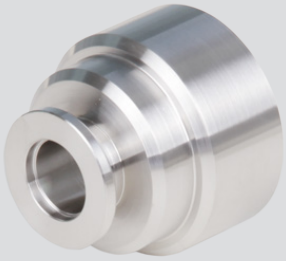

Power supply PSU 15

Part number: 3310A12010

Technische Änderungen vorbehalten. Technical details are subject to change. 04.04.22

ISO 9001
Zertifiziertes Qualitätsmanagementsystem
www.tuev-sued.de/ms-zert

Phone: +49 351 896 74-0
Fax: +49 351 896 74-99
E-Mail: info@dias-infrared.com
Web: www.dias-infrared.com

DIAS Infrared GmbH
Pforzheimer Straße 21
01189 Dresden
Germany