DIAS Infrared Systems

Pyroelectric Linear Arrays
PYROSENS

For Measurement Applications

www.dias-infrared.com

PYROSENS – Pyroelectric Linear Arrays 128

with 128, 256 or 510 Elements and Integrated CMOS Multiplexer

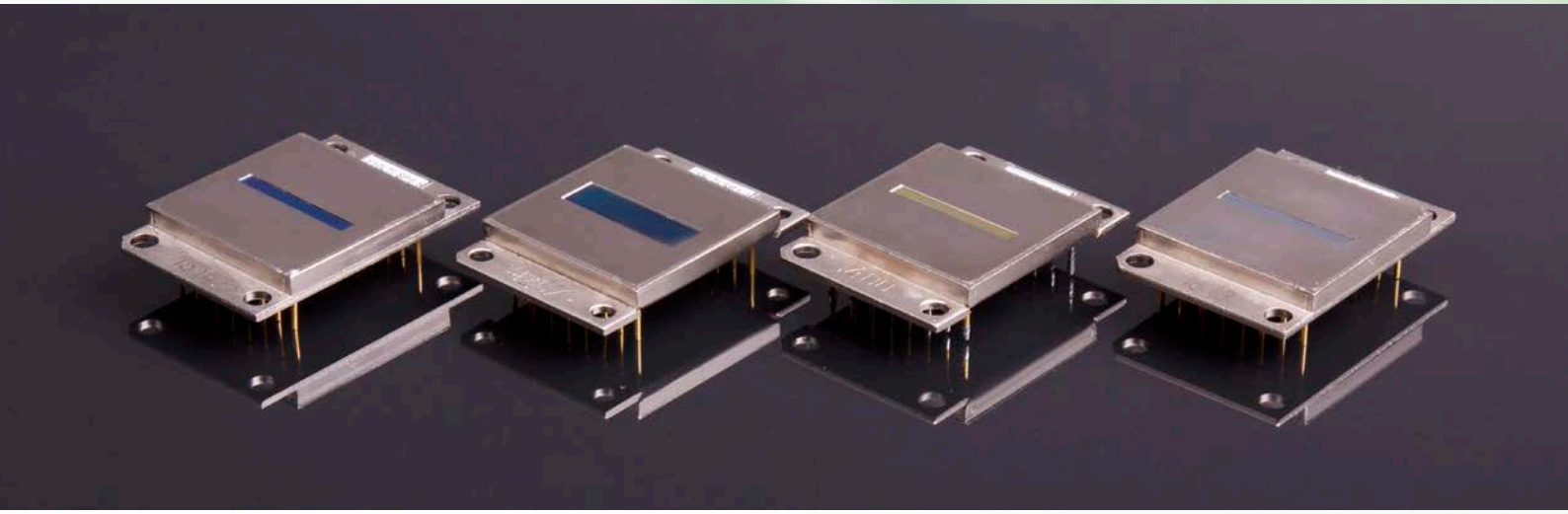

Linear Arrays in Volume Production

The LTx family of pyroelectric linear arrays is specifically designed for non-contact temperature measurement and infrared spectrometry. The arrays include a lithium tantalate chip with 128, 256 or 510 elements. The signals produced by the elements are processed in a CMOS circuit. Signal processing is carried out by the analogue circuitry, including an adapted low-noise preamplifier for each pixel, a multiplexer and an output amplifier. The pyroelectric chip and CMOS readout circuit are located on a thick film substrate, which is mounted inside a hermetic metal housing. The incident radiation reaches the sensitive elements through an infrared transparent window.

The preamplifiers transform the signal charges of each pixel into a signal voltage, include bandwidth limiting and pass the amplified signal to the sample & hold for the read-out process. The digital inputs are CMOS compatible.

For measurement of the detector temperature a sensor (type AD 590) is integrated into the package. It provides an output current which is proportional to the temperature.

In common with all pyroelectic detectors, the incoming infrared radiation needs to be modulated for a measurement to be made.

Ion-beam milled pyroelectric detector chips („I" in the type designation) with a thickness of approximately 5 µm enable a high responsivity and a low noise equivalent power NEP. An additional metal black coating („M" in type designation) realizes a high and homogeneous spectral absorption. Detector chips with ion-beam etched thermal isolation trenches („SL" in type designation) allow low modulation frequencies up to 10 Hz with excellent signal/noise-ratio.

What does the name of the array say?

PYROSENS	256	LT	M	I	SL	SP	0.5	V3
Pixel number (128, 256 or 510)								
Lithium tantalate								
Metal black coating								
Ion beam etched (higher responsivity)								
Thermal isolation trenches								
Array optimized for spectroscopic application								
Pixel length in mm (0.5 mm or 1.0 mm, without indication 0.1 mm)								
Optional internal gain factor (3, 5, 8 or 16)								

LTx, 256LTx and 510LTx

DIAS Infrared Systems

Pyroelectrical Linear Arrays – Types and Features										
Type	Sensitive Element				Sensor Parameters[1]					
	Number	Width [µm]	Length [µm]	Pitch [µm]	f_{Ch} [Hz]	S_V 10^3 [V/W]	u_R [mV]	NEP [nW]	MTF (R = 3 lp/mm)	Uniformity of S_V [%]
Element length 0.1 mm										
128LT	128	90	100	100	128	230	0.7	3.0	0.6	5
128LTI	128	90	100	100	128	540	0.8	1.5	0.6	10
128LTMI	128	90	100	100	128	620	0.8	1.3	0.6	8
128LTMI SL	128	90	100	100	10	8000	0.8	0.1	0.8	10
128LTMI SL	128	90	100	100	128	620	0.8	1.3	0.8	10
256LTI	256	42	100	50	128	620	0.7	1.1	0.6	10
256LTMI	256	42	100	50	128	710	0.7	1.0	0.6	8
256LTMI SL	256	42	100	50	10	9100	0.7	0.08	0.8	10
256LTMI SL	256	42	100	50	128	710	0.7	1.0	0.8	10
510LTI	510	20	100	25	128	680	0.9	1.3	0.8	10
Element length 0.5 mm										
128LT SP0.5	128	90	500	100	128	230	0.9	3.9	0.6	10
128LTI SP0.5	128	90	500	100	128	540	1.2	2.2	0.6	10
128LTMI SP0.5	128	90	500	100	128	620	1.2	1.9	0.6	8
128LTMI SP0.5 V3	128	90	500	100	128	1900	3.2	1.7	0.6	8
128LTMI SL SP0.5	128	90	500	100	10	8000	1.2	0.15	0.8	10
128LTMI SL SP0.5	128	90	500	100	128	620	1.2	1.9	0.8	10
128LTMI SL SP0.5 V3	128	90	500	100	10	24000	3.2	0.13	0.8	10
128LTMI SL SP0.5 V3	128	90	500	100	128	1900	3.2	1.7	0.8	10
256LTI SP0.5	256	42	500	50	128	620	0.9	1.4	0.6	10
256LTMI SP0.5	256	42	500	50	128	710	0.9	1.2	0.6	8
256LTMI SL SP0.5	256	42	500	50	10	9100	0.9	0.10	0.8	10
256LTMI SL SP0.5	256	42	500	50	128	710	0.9	1.2	0.8	10
256LTI SP0.5 V3	256	42	500	50	128	1850	2.2	1.2	0.6	10
256LTMI SP0.5 V3	256	42	500	50	128	2100	2.2	1.0	0.6	8
256LTMI SL SP0.5 V3	256	42	500	50	10	27000	2.2	0.08	0.8	10
256LTMI SL SP0.5 V3	256	42	500	50	128	2100	2.2	1.0	0.8	10
256LTI SP0.5 V5	256	42	500	50	128	3100	4.5	1.4	0.6	10
256LTI SP0.5 V8	256	42	500	50	128	4950	6.5	1.3	0.6	10
256LTI SP0.5 V16	256	42	500	50	128	9900	13.0	1.3	0.6	10
510LTI SP0.5	510	20	500	25	128	680	1.3	1.7	0.8	10
Element length 1.0 mm										
128LT SP1.0	128	90	1000	100	128	230	1.1	4.9	0.6	10
128LTI SP1.0	128	90	1000	100	128	540	1.9	3.5	0.6	10
128LTMI SP1.0	128	90	1000	100	128	620	1.9	3.0	0.6	8
256LTI SP1.0	256	42	1000	50	128	620	1.1	1.8	0.6	10
256LTMI SP1.0	256	42	1000	50	128	710	1.1	1.6	0.6	8
256LTI SP1.0 V3	256	42	1000	50	128	1850	3.0	1.6	0.6	10
256LTI SP1.0 V5	256	42	1000	50	128	3100	5.6	1.8	0.6	10
256LTI SP1.0 V8	256	42	1000	50	128	4950	8.5	1.7	0.6	10
256LTI SP1.0 V16	256	42	1000	50	128	9900	17.0	1.7	0.6	10
256LTMI SP1.0 V3	256	42	1000	50	128	2100	3.0	1.4	0.6	8

[1] Typical values, rectangular chopping with f_{Ch}, array temperature 25 °C, black body source temperature 400 °C, filter transmission 100 %.

f_{Ch} ... Chopper frequency for rectangular modulation
S_V ... Sensitivity
u_R ... Noise voltage
NEP ... Noise equivalent power
MTF ... Modulation transfer function

PYROSENS

Pyroelectric Linear Arrays – Technical Data

Technical Data

Features

- 128, 256 or 510 pixel arranged in one line
- low NEP (128 Hz) up to 1.1 nW, respectively NEP (10 Hz) up to 0.08 nW
- Dynamic range > 75 dB
- Modulation frequency up to 512 Hz
- Output voltage 2.5 V ± 2 V
- Integrated CMOS multiplexer
- High long-term stability
- Simple mode of operation
- Operation at ambient temperature
- Small package
- Coated silicon or germanium as infrared window
- Broad band windows (> 1.3 µm) or special filters on request

Maximum/minimum Conditions[1]

- VDD, VD2: –0.3 V to 7 V
- Digital inputs CLK, RES, VVR, VDR, VSH: –0.3 V to VDD + 0.3 V
- Chopping frequency f_{Ch}: 10 Hz to 512 Hz
- AD590+ to AD590–: –20 V to 44 V
- Analog output[2]: ± 5 mA
- Maximum irradiance: 50 mW/mm [2]
- Soldering temperature: 300 °C
- Storage temperature: –20 °C to 80 °C
- Operation temperature: –15 °C to 70 °C

[1] All voltages refer to ground (pin 10, 15).
[2] Not short resistent.

Typical Responsivity

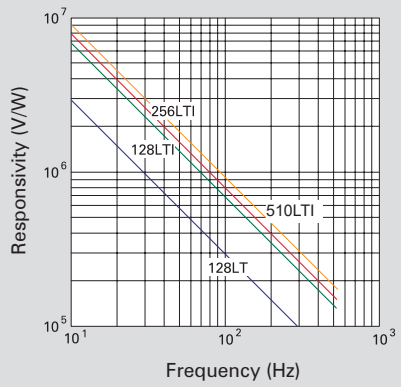

Typical MTF for sensors without thermal isolation trenches

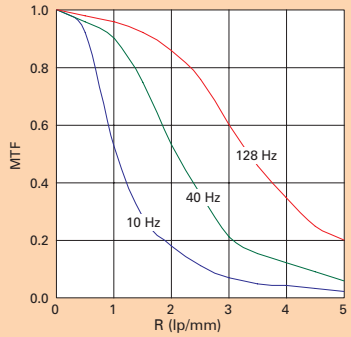

Electrical Parameters[3]

Parameter	Minimum value	Typical value	Maximum value	Unit
VDD	4.75	5.0	5.25	V
VD2	2.4	2.5	2.6	V
Digital inputs, low voltage	0		0.3 VDD	V
Digital inputs, high voltage	0.7 VDD		VDD	V
Digital inputs, switching threshold		0.5 VDD		V
Digital inputs, leakage current			± 1	µA
Current consumption		8		mA
AD590 operating voltage[4]	4		30	V

[3] All values for VDD = 5 V, VD2 = 2,5 V. [4] See data sheet of Analog Devices.

Pins – 128LTx, 256LTx and 510LTx

Pin	Name	Function	Pin	Name	Function
1	CLK	Input clock CLK (trigger on rising edge)	9	OUT, OUT1[5]	Analog signal output, analog signal output (odd pixels)[5]
2	RES	Input clock RES (active low)	10	GND	Ground
3	VVR	Input clock VVR (active high)	11	n.c., OUT2[5]	Not connected, analog signal output (even pixels)[5]
4	VDR	Input clock VDR (active high)	12	AD590+	Temperature sensor
5	VSH	Input clock VSH (active high)	13	AD590–	Temperature sensor
6	VD2	Operating voltage (+2.5 V)	14	case	Case
7	VDD	Operating voltage (+5 V)	15	GND	Ground
8	VD2	Operating voltage (+2.5 V)	16	VDD	Operating voltage (+5 V)

[5] Only available for 510LTx.

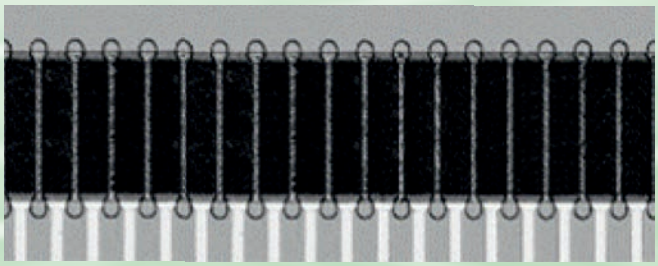

Detail view of a pyroelectric lithium tantalat chip with an additional metal black coating and ion-beam etched isolation trenches.

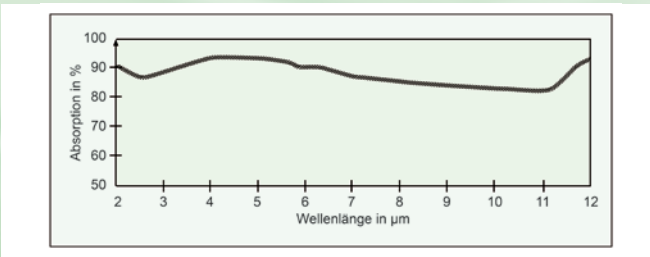

Typical wavelength dependence of the spectral absorption of the optional metal absorber.

Internal Read-out Circuit

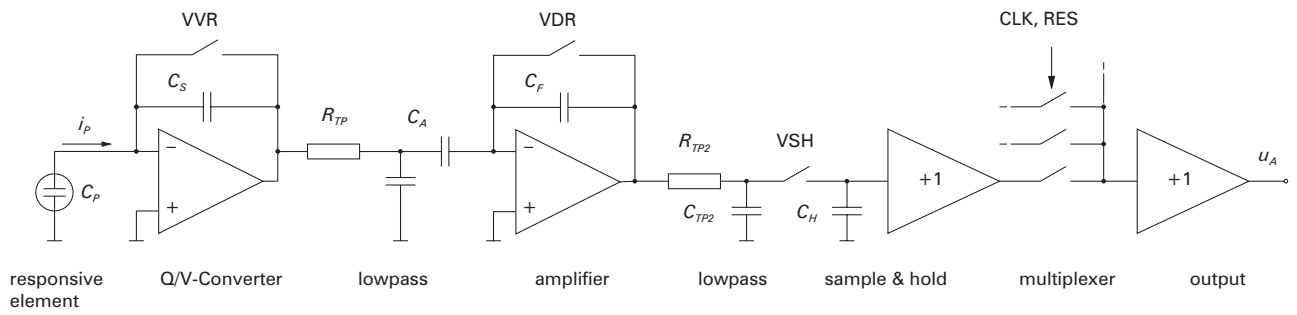

Clock parameters[1]					
Parameter	**Relative value**	**Minimum value**	**Typical value**	**Maximum value**	**Unit**
Chopping frequency[2] f_{Ch}		10	128	512	Hz
Readout CLK $f_{CLK} = 2 \cdot f_{Ch} \cdot 268$	$1/t_{CLK}$	0	69	300	kHz
Reset clock low-impulse duration t_{RES}	$1/2\ t_{CLK}$	1.8	7.5		µs
Clock VVR high-impulse duration t_{VVR}	$2\ t_{CLK}$	7.5	30		µs
Clock VDR high-impulse duration[3] t_{VDR}	$28\ t_{CLK}$	200	400		µs
Clock VSH high-impulse duration t_{VSH}	$1\ t_{CLK}$	3.5	15		µs
Setting time at the output t_{out}				1	µs

[1] All values for VDD = 5 V, VD2 = 2,5 V. [2] $t_{Ch\ low} = t_{Ch\ high}$. [3] For f_{Ch} = 512 Hz must be $t_{VDR} = 56 \cdot t_{CLK}$ = 200 µs.

Clock diagram

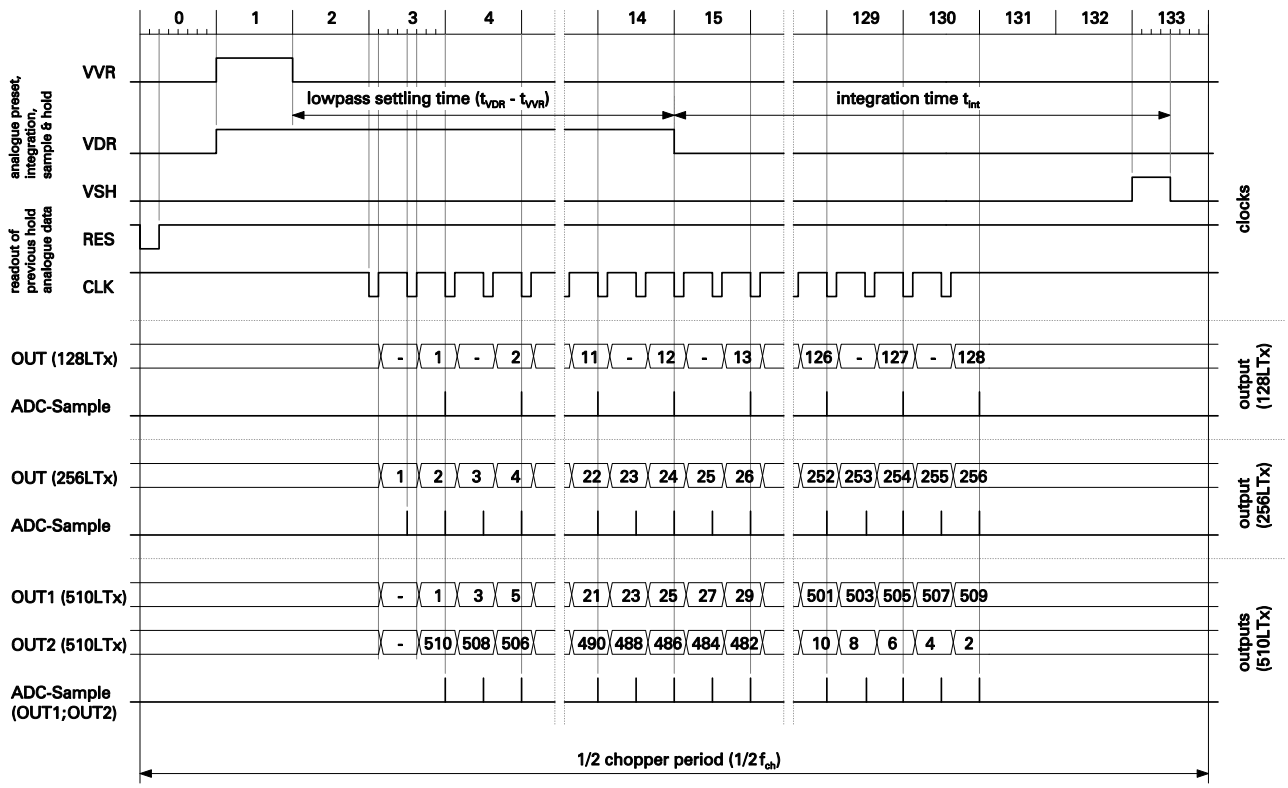

PYROSENS

Dimensional drawings

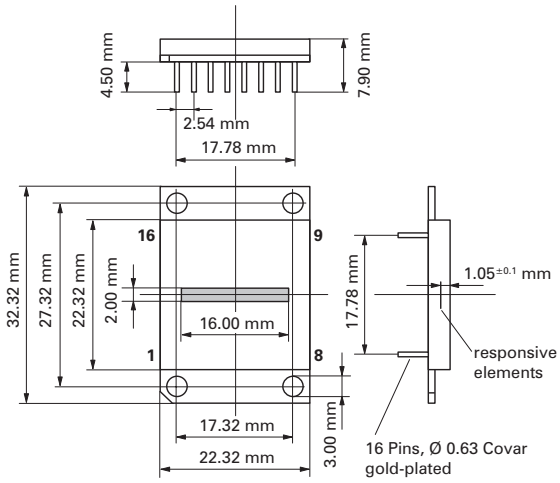

Connect pin 6 to pin 8 (VD2), pin 7 to pin 16 (VDD), pin 10 to pin 15 (GND).

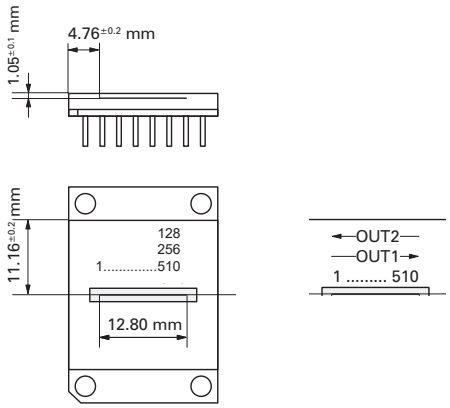

Readout direction (510LTx only):
OUT1 (odd pixel): 1,3,...509
OUT2 (even pixel): 510, 508,...2

Customized pyroelectric arrays

For special applications of our customers, we also develop and manufacture pyroelectrical arrays adapted to the application:

– up to 510 elements
– adapted element geometry
– down to 25 µm element center distance (pitch)
– special narrow band, broadband or gradient filters

An example are very long linear arrays with 256 elements and 100 µm pitch, ion beam etched chip and additional metal absorber. They enable high spectral resolutions in spectroscopic applications.

The pyroelectric chip with two readout circuits and a temperature sensor is in a metal hermetic housing. The arrays are also available with thermal isolation trenches („SL" in the type designation), so that particularly a good signal-to-noise ratio is possible at lower measurement speed (chopper frequency 10 Hz).

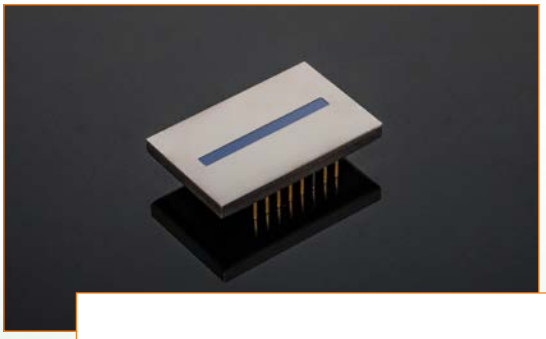

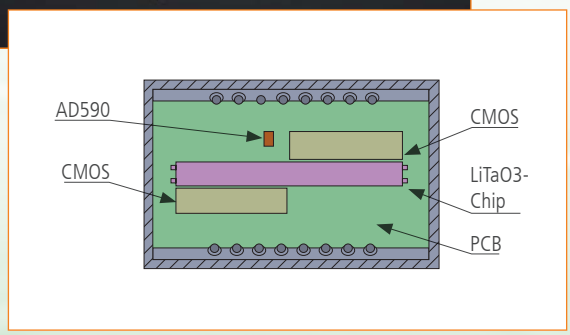

Customized linear arrays										
Type	Sensitive Element				Sensor Parameters[1]					
	Number	Width [µm]	Length [µm]	Pitch [µm]	f_{Ch} [Hz]	S_V 10^3 [V/W]	u_R [mV]	NEP [nW]	MTF (R = 3 lp/mm)	Uniformity of S_V [%]
256 LTMI SP0.5 P0.1 V3	256	90	500	100	128	1900	3.2	1.7	0.6	8
256 LTMI SL SP0.5 P0.1 V3	256	90	500	100	10	24000	3.2	0.13	0.8	10
256 LTMI SL SP0.5 P0.1 V3	256	90	500	100	128	1900	3.2	1.7	0.8	10

[1] Typical values, rectangular chopping with f_{Ch}, array temperature 25 °C, black body source temperature 400 °C, filter transmission 100 %.

PYROSENS

Evaluation Kit

The **Evaluation Kit** allows easy operation of the PYROSENS arrays. It consists of a small circuit board with complete electronics and software by which the electronics is controlled via USB connection from a Windows PC. The power can be provided by the USB port or a separate power supply (9 V). For synchronisation with further external components, such as for radiation modulation, a trigger pulse is provided.

A DLL interface for the integration of the evaluation kit in custom software solutions and common laboratory software is available. Thus, commissioning and integration of PYROSENS arrays in their own software and system solutions become even easier. The interface permits access to all array parameters via API functions and reading out the pixel values.

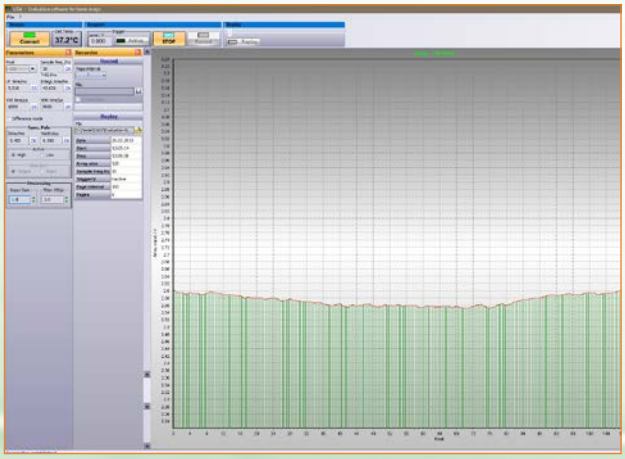

The evaluation kit can be integrated into a variety of software environments, e.g.

– NATIONAL INSTRUMENTS LabVIEW
– MathWorks MATLAB
– Microsoft Visual Studio
– Embarcadero RAD Studio

For the development of software in C / C ++ corresponding header and lib files are included.

ISO 9001
Certified
Quality Management System
www.tuv-sud.com/ms-cert

Phone: +49 351 896 74-0
Fax: +49 351 896 74-99
Email: info@dias-infrared.de
Internet: www.dias-infrared.com

DIAS Infrared GmbH
Pforzheimer Straße 21
01189 Dresden
Germany